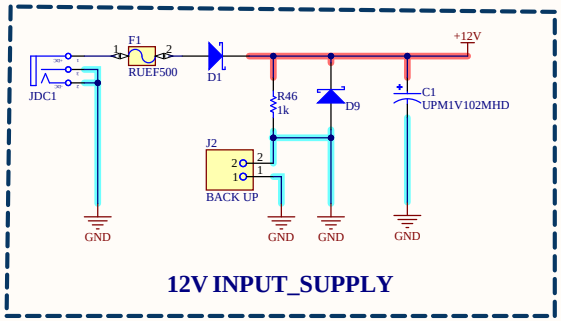

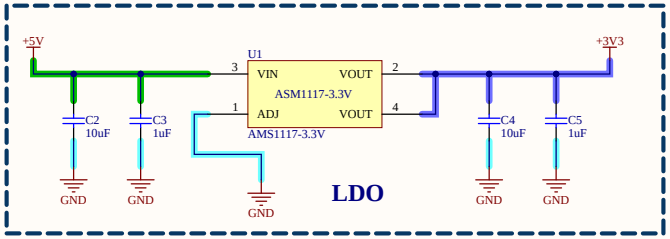

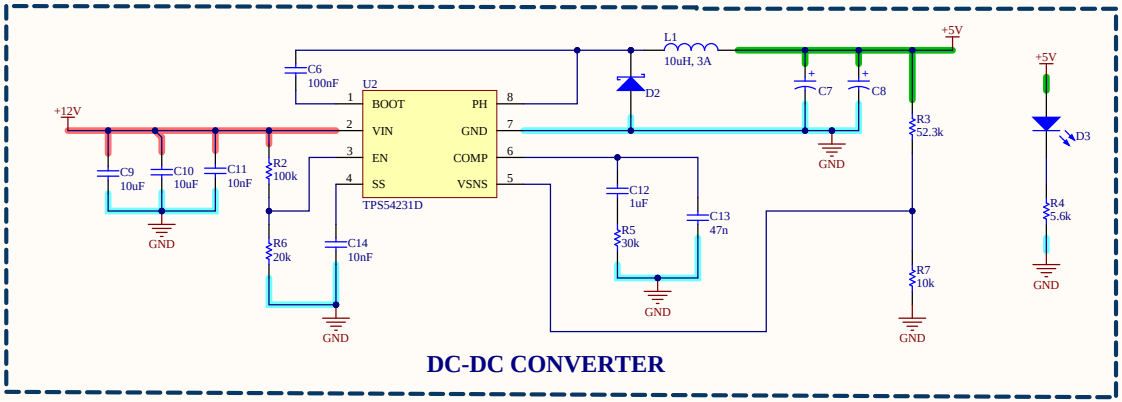

Altium Designer	Title: *	Desc: **POWER SUPPLY.SchDoc**	
	Designed by: *	Document No:	Revision: *
	Checked by: *	Date: *	Size: **A3**
	Approved by: *	Sheet **2** of **5**	